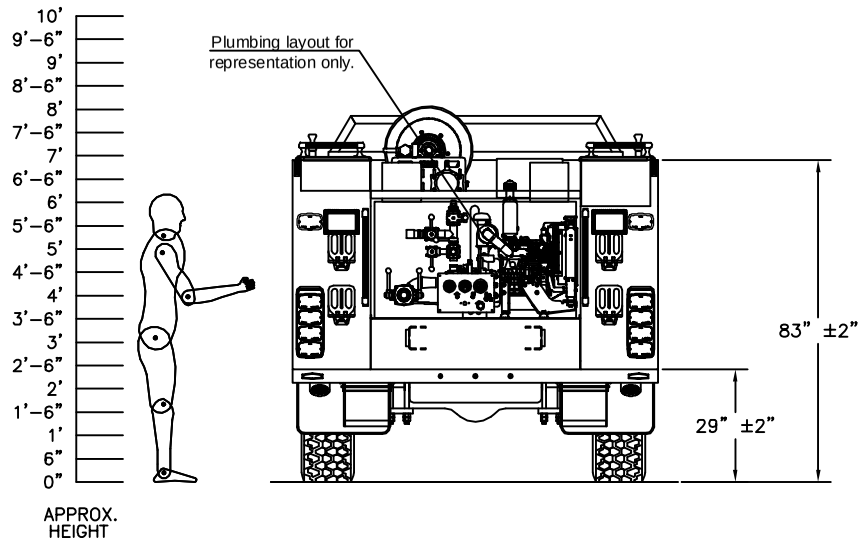

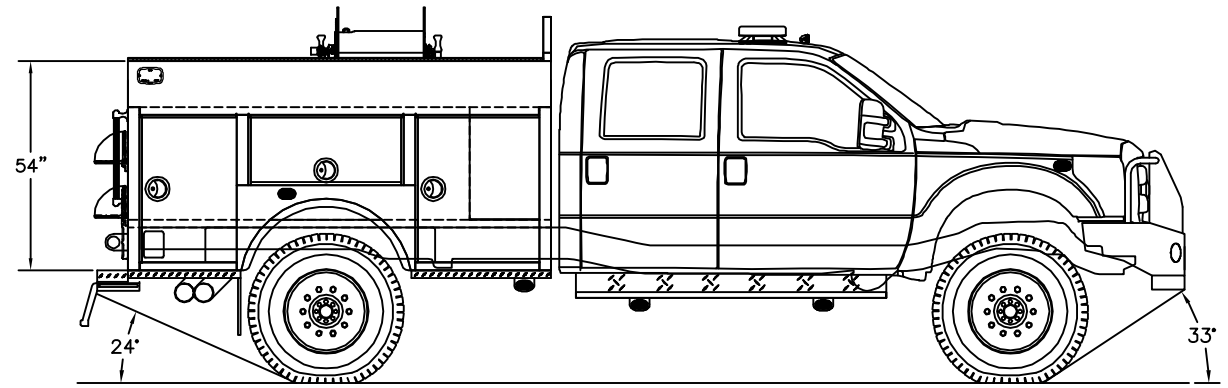

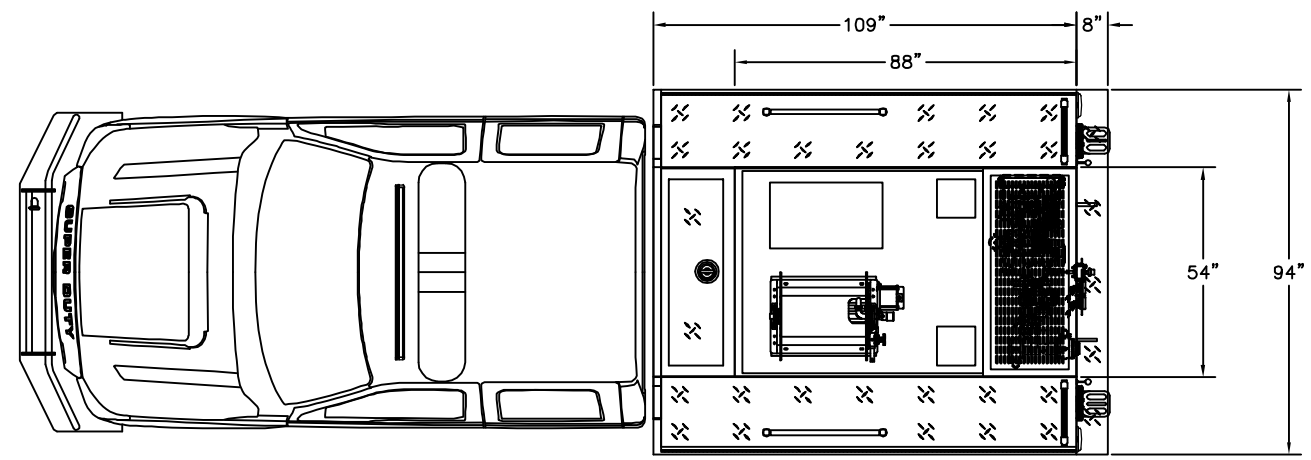

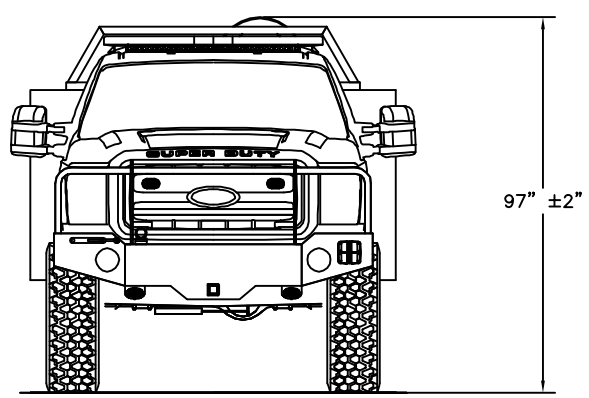

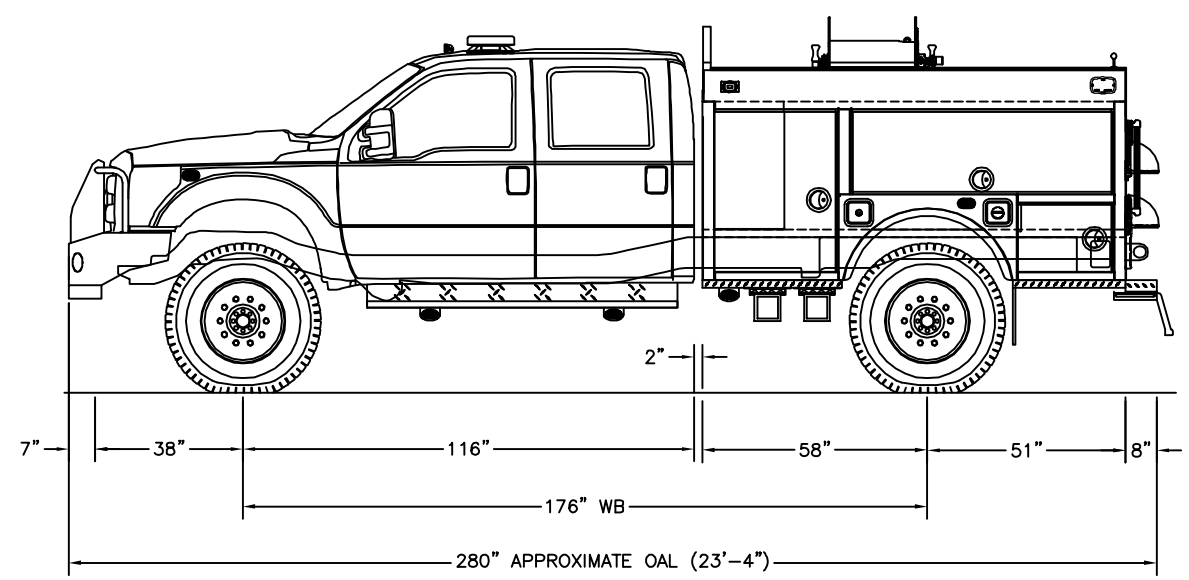

FORD F-550 4X4
CREW CAB
DARLEY 1.5AGE-24K DIESEL DRIVEN PUMP
300/10 GALLONS POLY TANK
109" PATROL (ALUMINUM)
HALE 2.1 FOAMLOGIX

THIS DRAWING IS A GENERAL CONFIGURATION AND MAY NOT NECESSARILY REFLECT ALL CONTRACTUAL REQUIREMENTS. CONTRACT SPECIFICATIONS SHALL PREVAIL OVER DRAWING.

CUSTOMER APPROVAL:

NAME:

TITLE:

DATE:

SYM	DATE	REVISION DESCRIPTION	APP'D

SALES ENGINEER : TBD

DIMENSIONS ARE APPROXIMATE & MAY VARY DUE TO BUILD ADJUSTMENTS

SCALE	DWG SIZE	DRAWN BY	DATE
1"=24"	D	DBK	1/13/2015
		APPROVED BY DBK	

KME COMMERCIAL WILDLAND

SANTA CLARA COUNTY, CA

PROPOSAL

KME KOVATCH

KOVATCH MOBILE EQUIPMENT
ONE INDUSTRIAL COMPLEX - NESQUEHONING, PA 18240