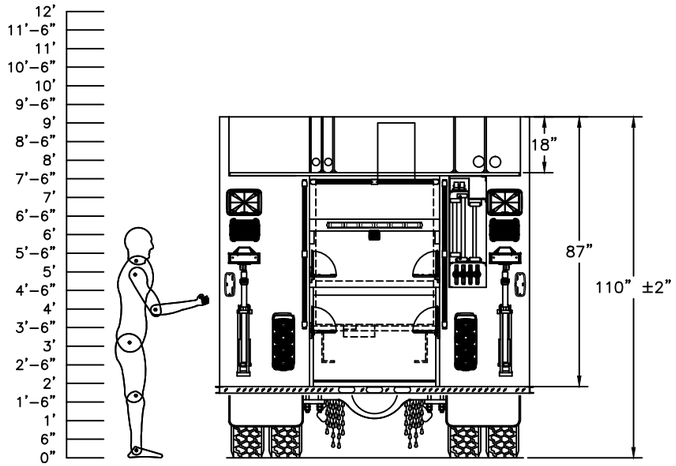

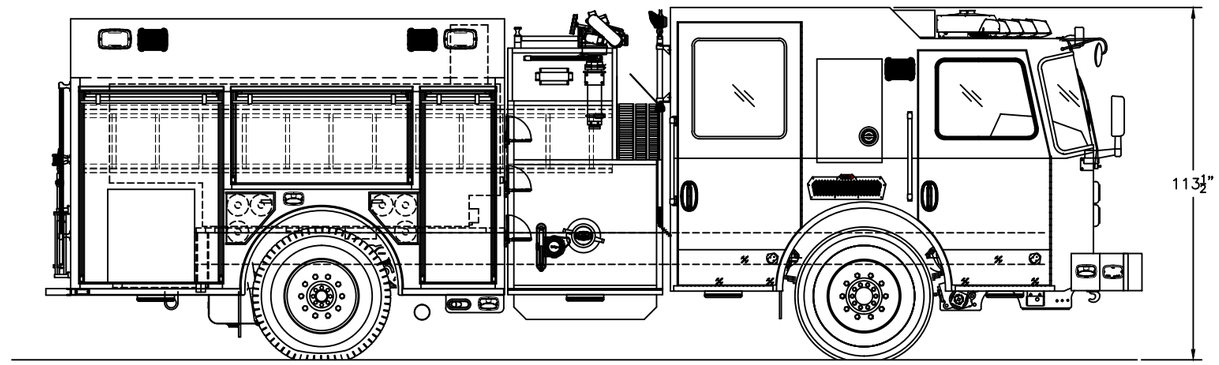

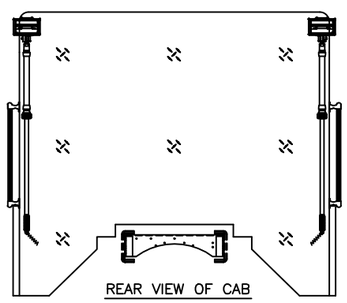

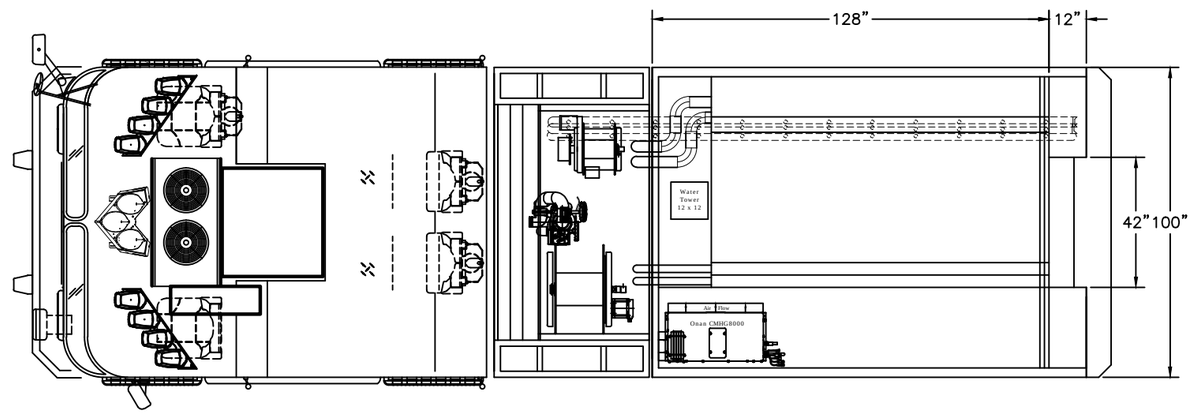

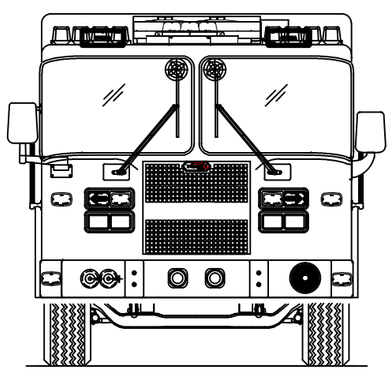

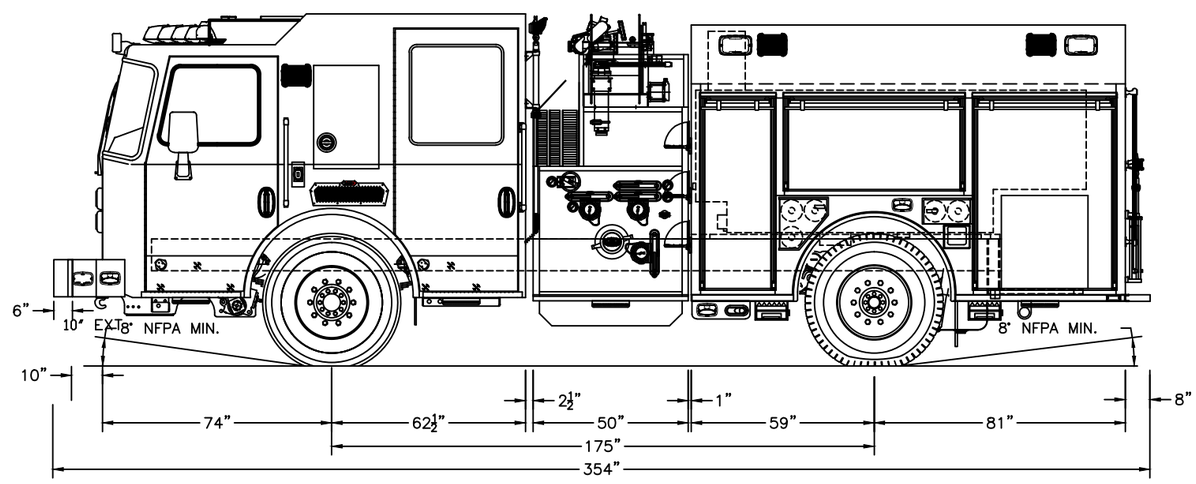

CAB: 100"W KME PANTHER MFD 10" RR ALUM
ENGINE & TRANS: CUMMINS L9 450 HP/ALLISON 3000 EVS
AXLES: 20,000# FRONT/27,000# REAR
PUMP: HALE QMAX-200 2,000 GPM SINGLE STAGE
WATER TANK: 750 GALLONS POLY
BODY TYPE: 140" FLEX SHORT 3/16" ALUMINUM

THIS DRAWING IS A GENERAL CONFIGURATION AND MAY NOT NECESSARILY REFLECT ALL CONTRACTUAL REQUIREMENTS. CONTRACT SPECIFICATIONS SHALL PREVAIL OVER DRAWING.

CUSTOMER APPROVAL:

NAME:

TITLE:

DATE:

SYM	DATE	REVISION DESCRIPTION	APP'D
C	12/3/2018	REVISED PROPOSAL	MJH
B	11/16/2018	REMOVED STOKES MODULE	MJH
A	11/13/2018	REVISED PROPOSAL	MJH

SALES ENGINEER : TBD

DIMENSIONS ARE APPROXIMATE & MAY VARY DUE TO BUILD ADJUSTMENTS

SCALE	DWG SIZE	DRAWN BY	DATE
NONE	B	JJM	8-29-18
		APPROVED BY	

KME CUSTOM PUMPER

PITTSTON, PA

PROPOSAL

KME

ONE INDUSTRIAL COMPLEX – NESQUEHONING, PA 18240