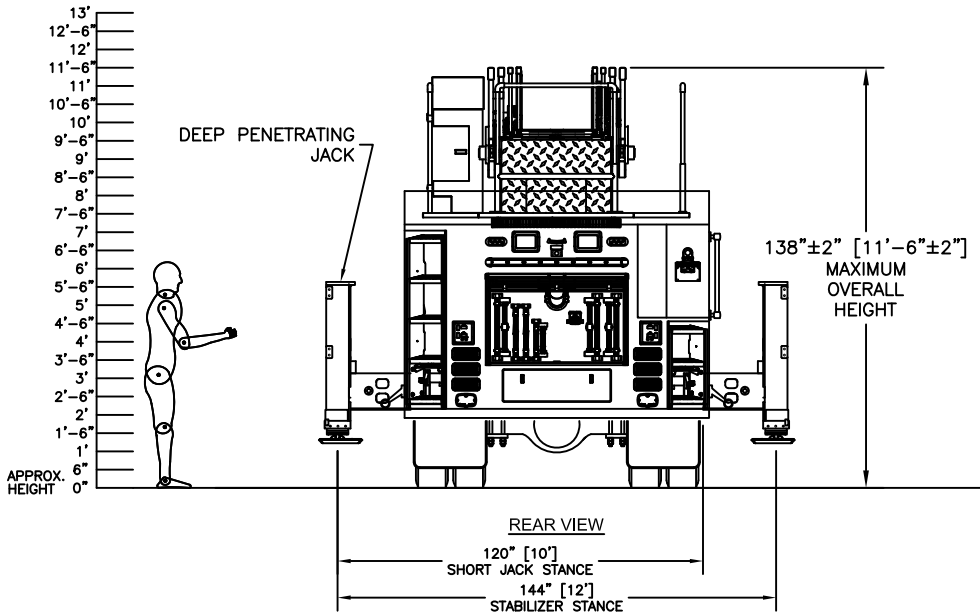

REAR VIEW

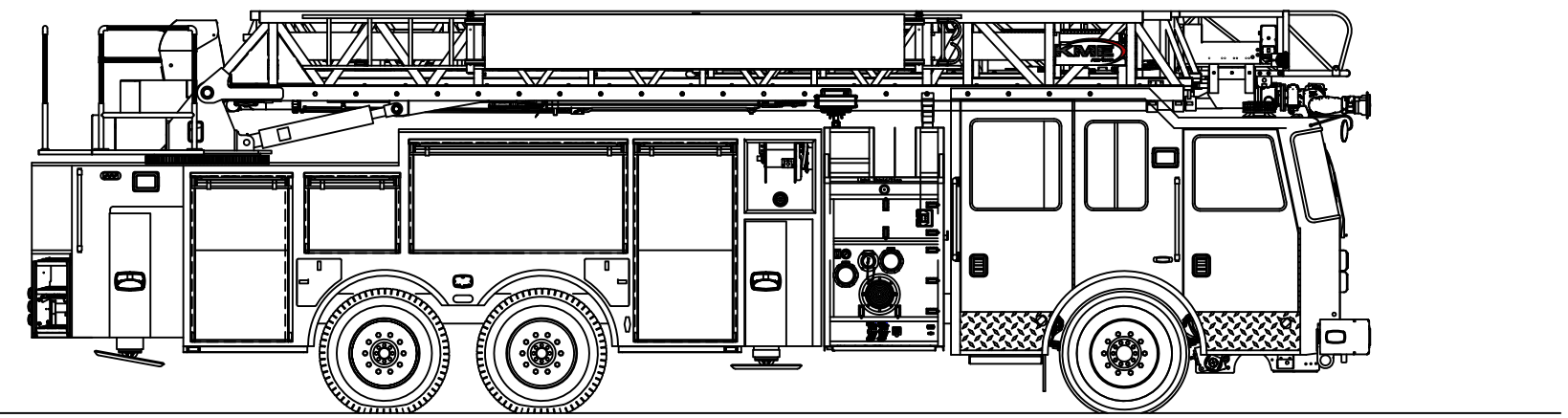

OFFICER'S SIDE VIEW

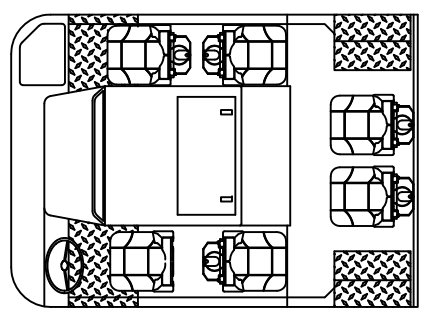

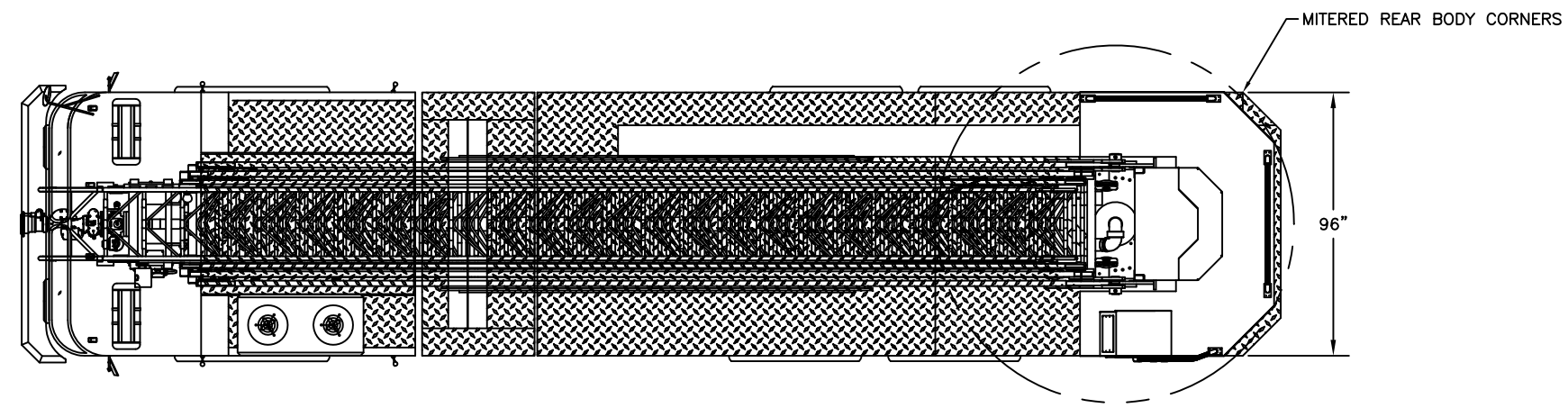

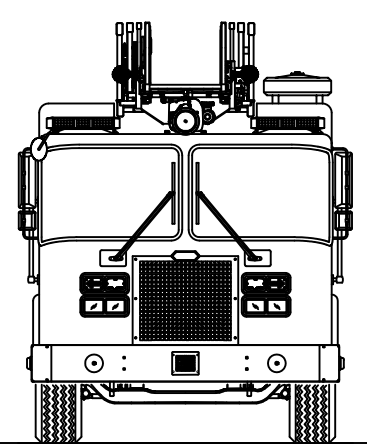

FRONT VIEW

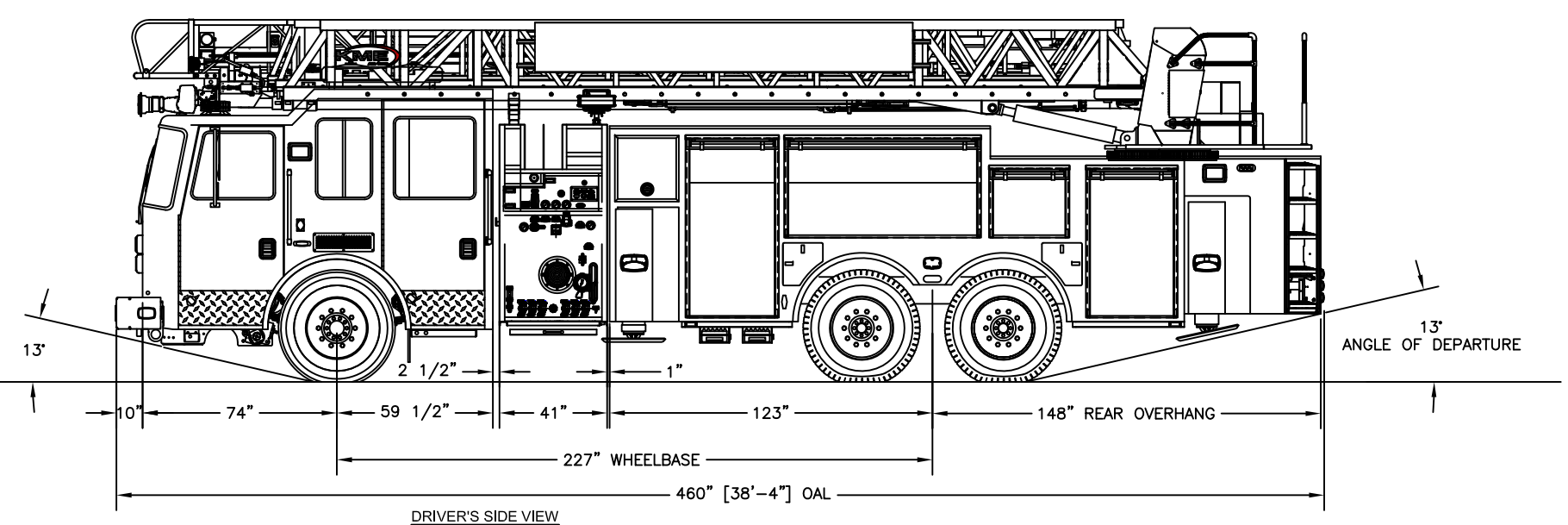

DRIVER'S SIDE VIEW

CAB: PREDATOR SEVERE SERVICE 96" X-MFD 10" RAISED ROOF
ENGINE/TRANSMISSION: ISX12 500 HP / ALLISON 4000EVS
AERIAL DEVICE: 103' REAR MOUNT LADDER
PUMP: HALE QMAX-XS-150 1500 GPM SINGLE STAGE
TANK TYPE: 650 GALLON POLYIIE
BODY: 3/16" ALUMINUM

SYM	DATE	REVISION DESCRIPTION	APP'D

SALES ENGINEER : ZACKZSCHUNKE

DIMENSIONS ARE APPROXIMATE & MAY VARY DUE TO BUILD ADJUSTMENTS

SCALE	DWG SIZE	DRAWN BY J BEHLER	DATE
NONE	B	APPROVED BY	2-15-18

103' REAR MOUNT LADDER

TUFF TRUCK RETAIL UNIT

GSO # 10820

KME
ONE INDUSTRIAL COMPLEX - NESQUEHONING, PA 18240